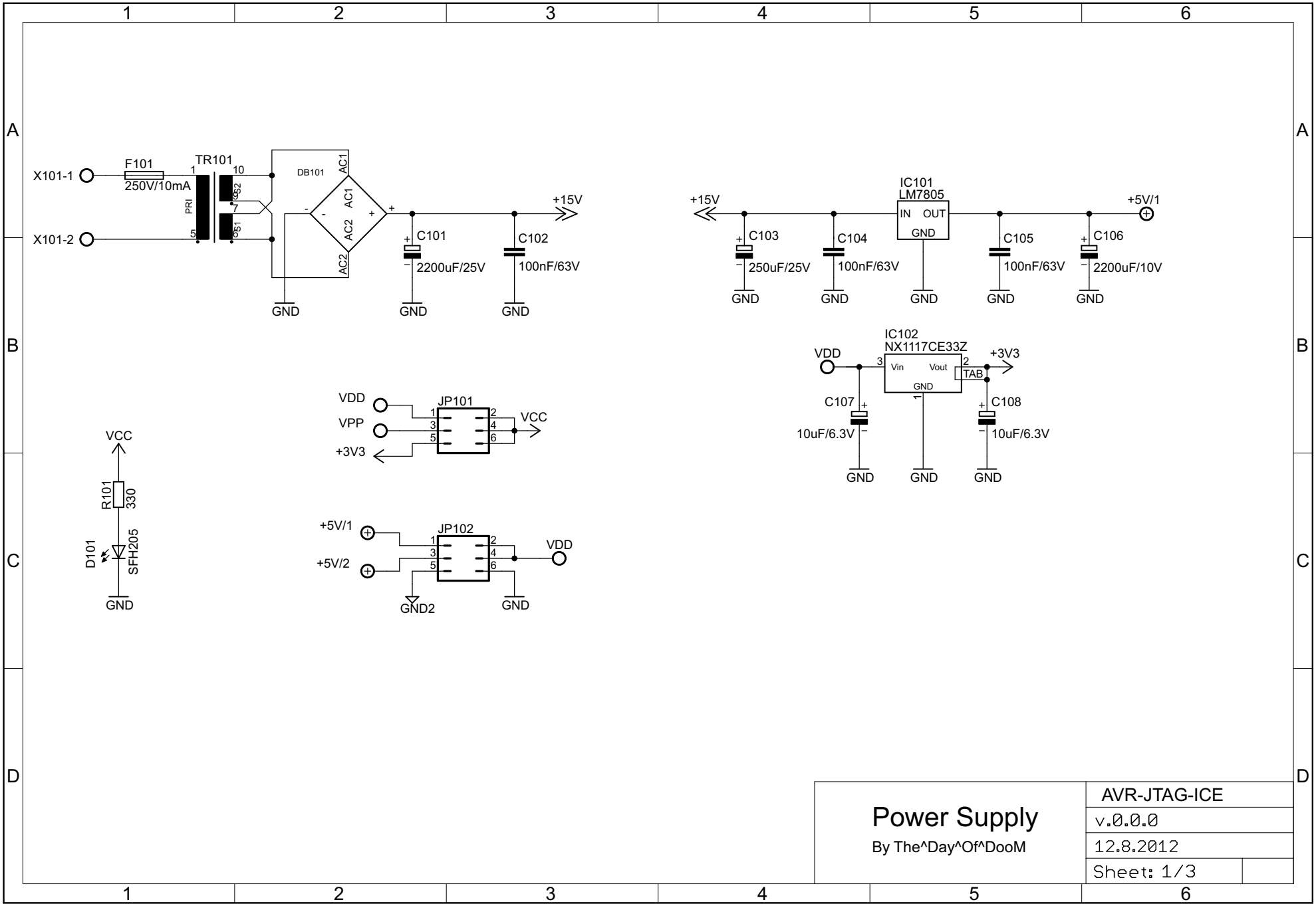
X101-1
X101-2
F101
250V/10mA
TR101
PRI
DB101
AC1
AC2
C101
2200uF/25V
C102
100nF/63V
+15V
GND
IC101
LM7805
IN
OUT
C103
250uF/25V
C104
100nF/63V
C105
100nF/63V
C106
2200uF/10V
+5V/1
IC102
NX1117CE33Z
Vin
Vout
TAB
VDD
+3V3
C107
10uF/6.3V
C108
10uF/6.3V
JP101
VPP
VCC
JP102
+5V/2
GND2
R101
330
D101
SFH205
Power Supply
By The^Day^Of^DooM
AVR-JTAG-ICE
v.0.0.0
12.8.2012
Sheet: 1/3

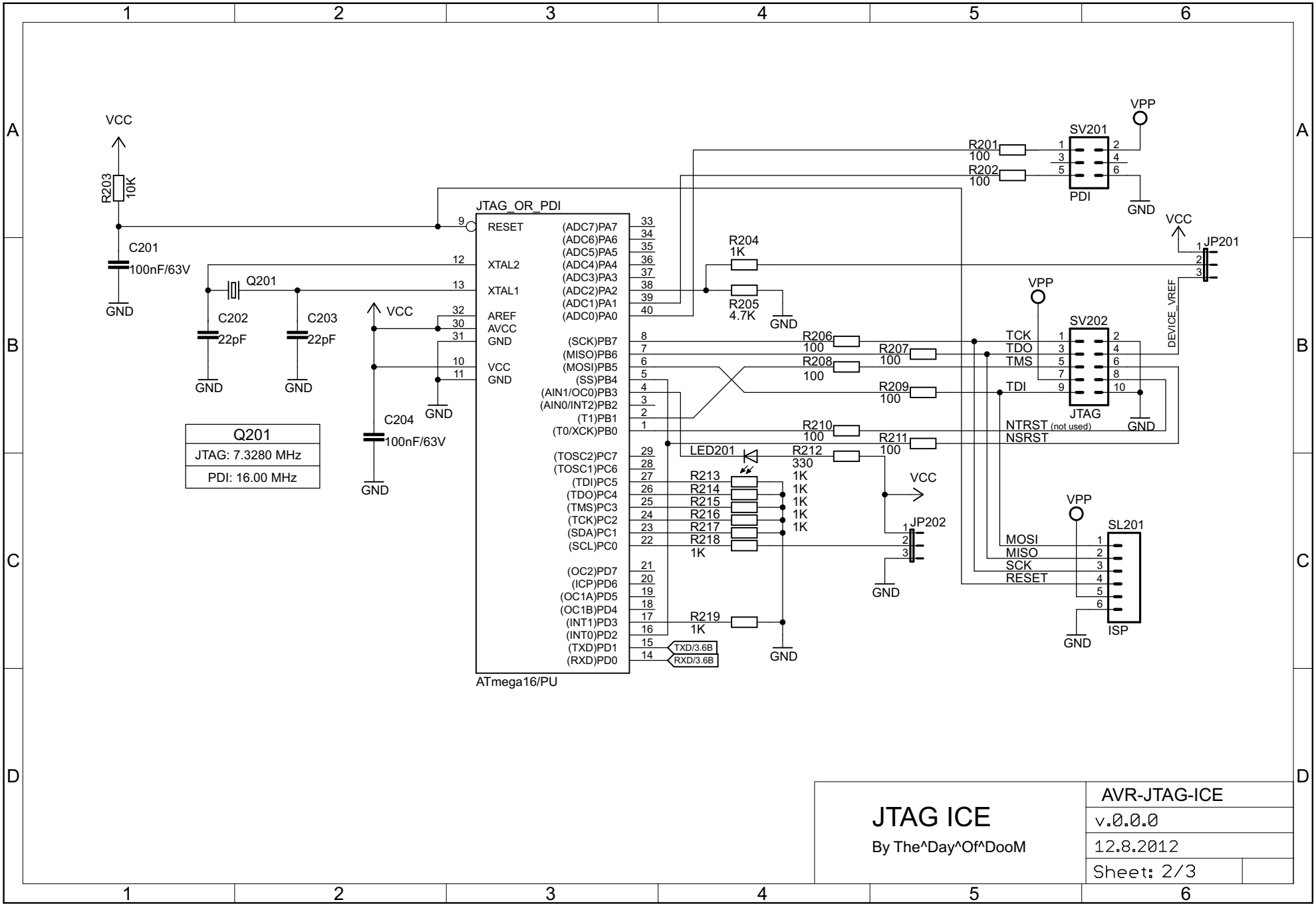
VCC
R203
10K
C201
100nF/63V
GND
Q201
C202
22pF
C203
22pF
C204
100nF/63V
JTAG_OR_PDI
RESET
XTAL2
XTAL1
AREF
AVCC
GND
VCC
GND
(SCK)PB7
(MISO)PB6
(MOSI)PB5
(SS)PB4
(AIN1/OC0)PB3
(AIN0/INT2)PB2
(T1)PB1
(T0/XCK)PB0
(TOSC2)PC7
(TOSC1)PC6
(TDI)PC5
(TDO)PC4
(TMS)PC3
(TCK)PC2
(SDA)PC1
(SCL)PC0
(OC2)PD7
(ICP)PD6
(OC1A)PD5
(OC1B)PD4
(INT1)PD3
(INT0)PD2
(TXD)PD1
(RXD)PD0
(ADC7)PA7
(ADC6)PA6
(ADC5)PA5
(ADC4)PA4
(ADC3)PA3
(ADC2)PA2
(ADC1)PA1
(ADC0)PA0
ATmega16/PU
TXD/3.6B
RXD/3.6B
Q201
JTAG: 7.3280 MHz
PDI: 16.00 MHz
R204
1K
R205
4.7K
LED201
R212
330
R213
R214
R215
R216
R217
R218
1K
R219
1K
R206
R207
R208
R209
R210
R211
100
VPP
SV201
R201
R202
PDI
JP201
DEVICE_VREF
SV202
TCK
TDO
TMS
TDI
NTRST (not used)
NSRST
JTAG
JP202
SL201
MOSI
MISO
SCK
RESET
ISP
JTAG ICE
By The^Day^Of^DooM
AVR-JTAG-ICE
v.0.0.0
12.8.2012
Sheet: 2/3

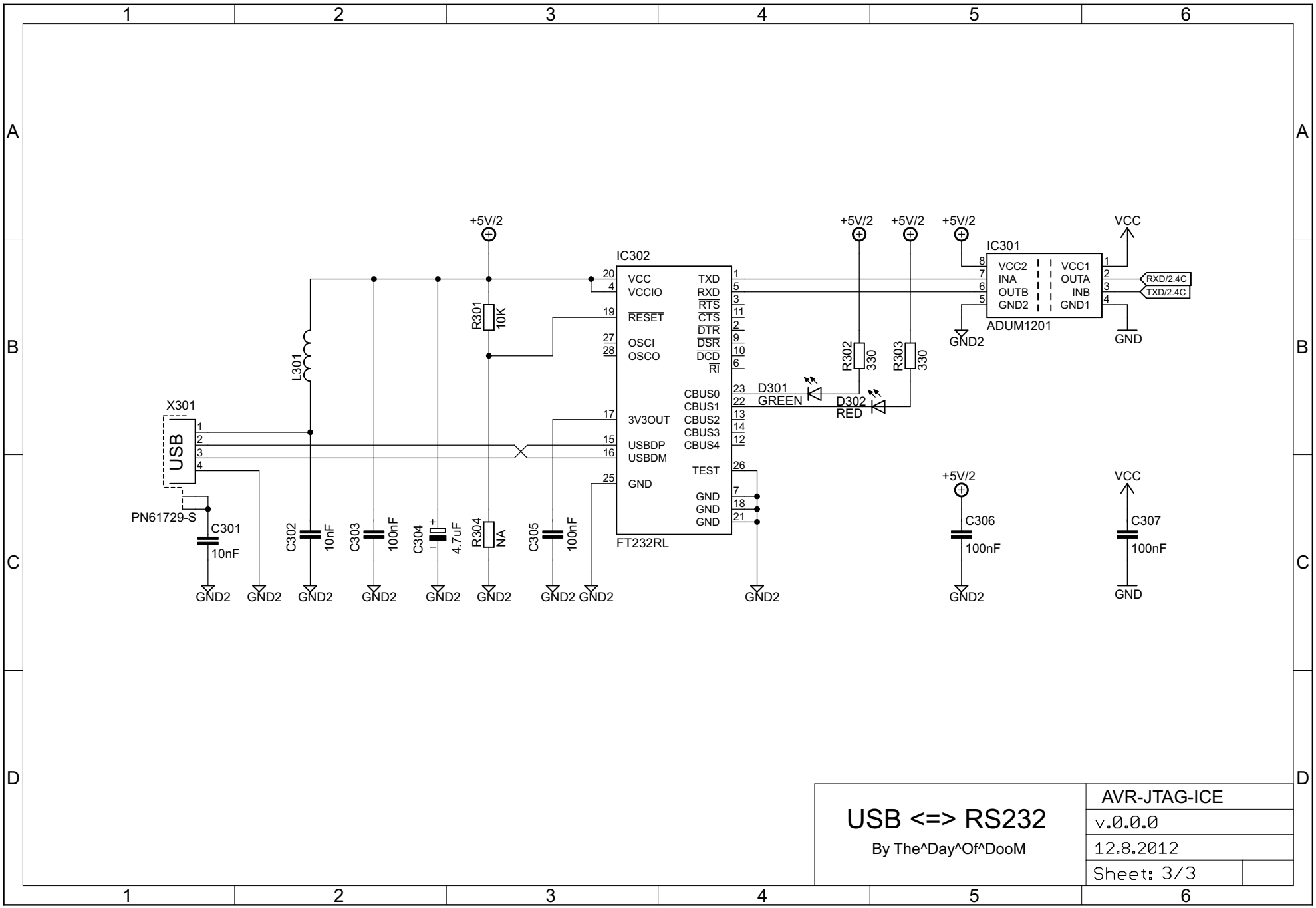
1
2
3
4
5
6
A
B
C
D
+5V/2
IC302
VCC
VCCIO
RESET
OSCI
OSCO
3V3OUT
USBDP
USBDM
GND
TXD
RXD
RTS
CTS
DTR
DSR
DCD
RI
CBUS0
CBUS1
CBUS2
CBUS3
CBUS4
TEST
GND
GND
GND
FT232RL
R301
10K
L301
X301
USB
PN61729-S
C301
10nF
C302
10nF
C303
100nF
C304
4.7uF
R304
NA
C305
100nF
R302
330
R303
330
D301
GREEN
D302
RED
IC301
VCC2
INA
OUTB
GND2
VCC1
OUTA
INB
GND1
ADUM1201
RXD/2.4C
TXD/2.4C
VCC
GND
GND2
C306
100nF
C307
100nF
USB <=> RS232
By The^Day^Of^DooM
AVR-JTAG-ICE
v.0.0.0
12.8.2012
Sheet: 3/3